VOLVO

MICRO-LED FOR AUTOMOTIVE LIGHTING

OEM STAKES INSIGHT

Paul-Henri MATHA

2023.03.13

EPIC
European Photonics Industry Consortium

What are the usage ?

Lighting

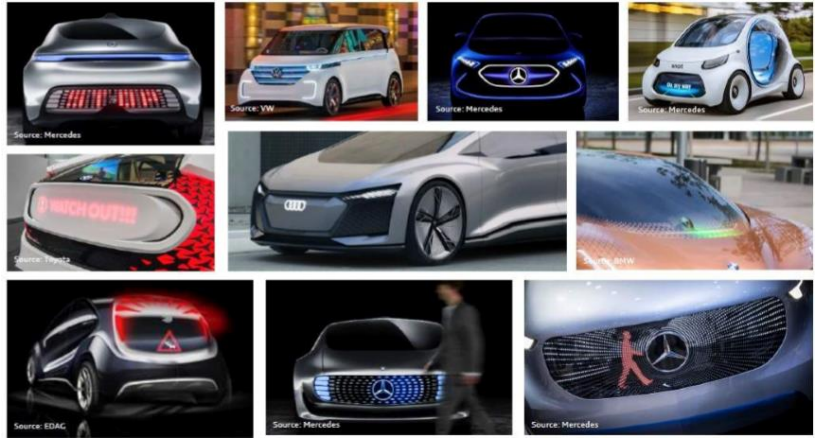

Signaling & communication

Road marking

Source : Google

VOLVO

Focus on lighting & intelligent lighting

Target : To have always the maximum light on the road whatever the traffic to improve safety

Solution : Adaptive driving beam with partial high beam that will not glare oncoming cars

Camera detection

Source : DVN Munich 2020

Lighting beam pattern

EPIC European Photonics Industry Consortium

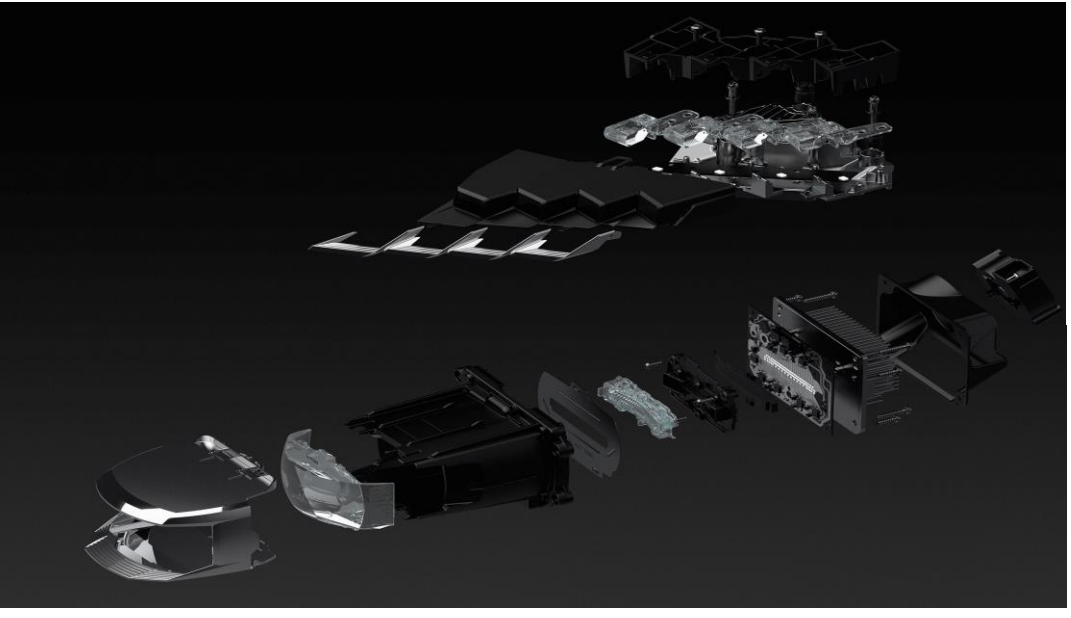

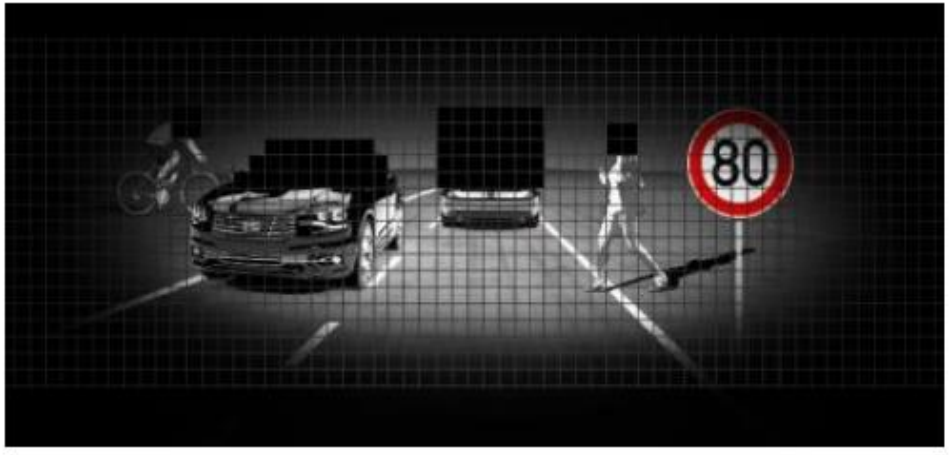
80

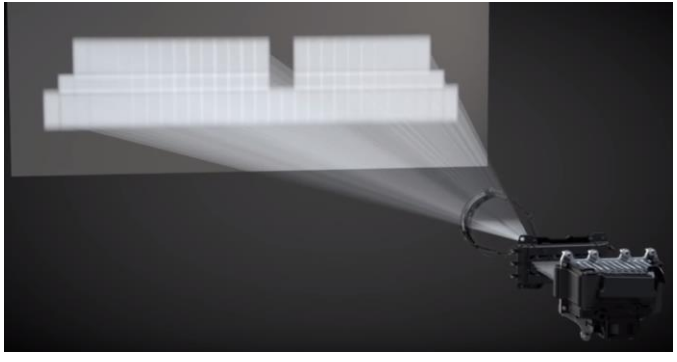

Stakes for lighting

Usage of Micro LED to do High Definition headlamp

1/ Beam pattern :

- Lumen on the road : ~ 2000lm for low beam, 4000lm for low beam + high beam
- horizontal field of view : 90 degrees
- Vertical field of view : 20 degrees

2/ Power consumption

3/ Size

4/ high definition system (resolution) to have the maximum accuracy and minimum keep out zone (black area)

Current High definition headlamp on the road

DLP solution

Light source + micro-mirrors
100% of light source ON whatever the light on the road

Estimated Size : 150mm x 150mm x 150mm

Estimated Power : 60 W

Estimated horizontal Field of View : +/-7 degrees

Estimated vertical Field of View : +/-4 degrees

1,3 Millions Pixels

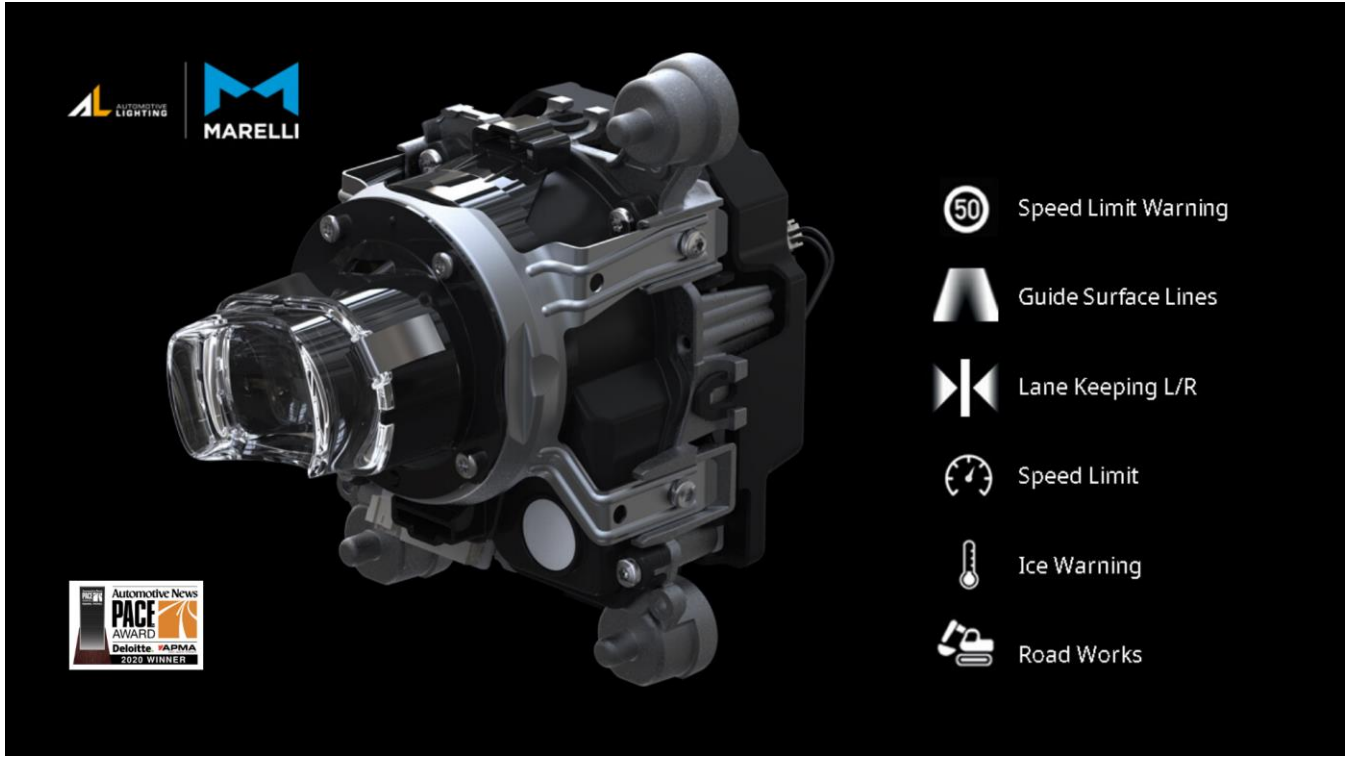

Source : Google

Current High definition headlamp

Estimated Size : 150mm x 150mm x 150mm

Estimated Power : 60 W

Estimated horizontal Field of View : +/- degrees

Estimated vertical Field of View : +/-4 degrees

1,3 Millions Pixels

⇒ Need an additional low beam module and high beam module

⇒ Low beam + high beam ~ 200 W / cars

⇒ 4g C02 / autonomy of battery if BEV

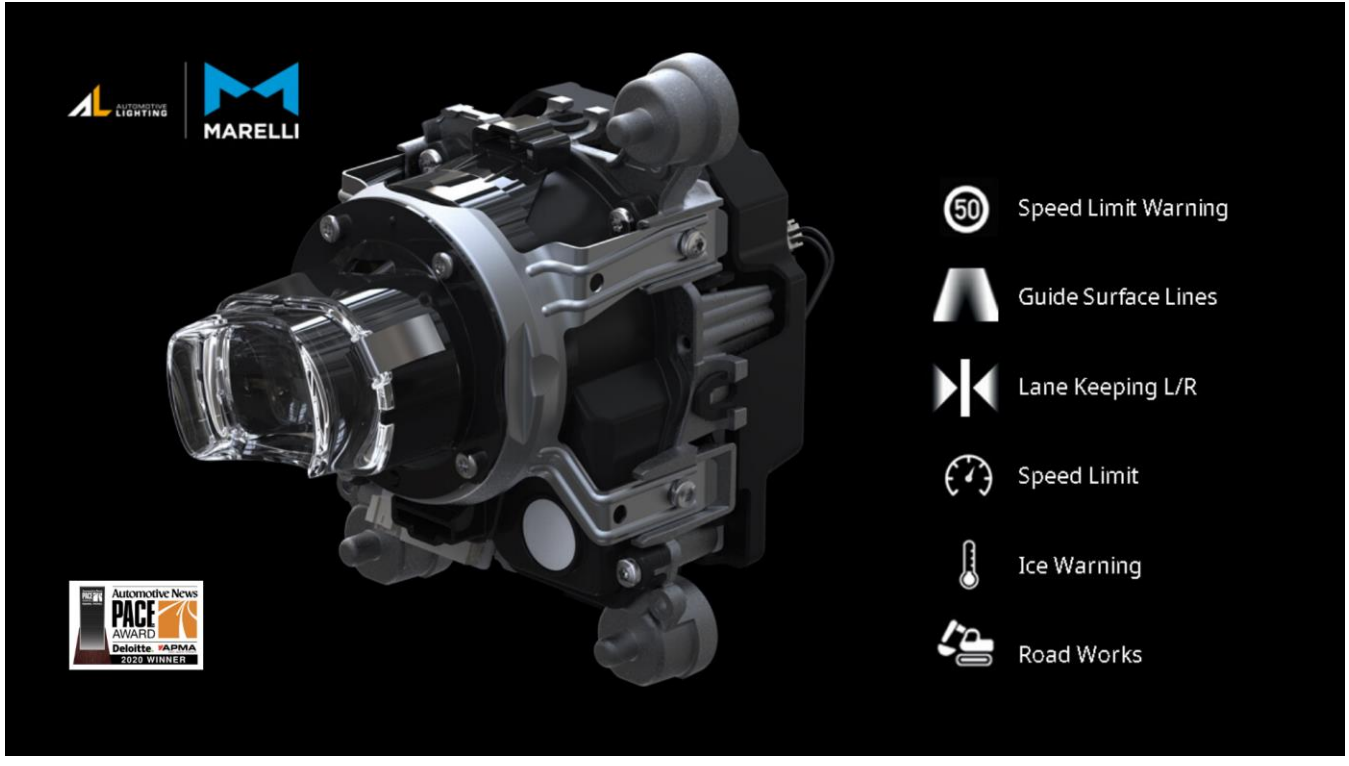

Source : Google

High definition headlamp with Microled – 1st proposal

Estimated Size : 105mm x 90mm x 125mm

Estimated Power : 55 W

Estimated horizontal Field of View : +/-17 degrees

Estimated vertical Field of View : +/-4 degrees

25 K Pixel

⇒ Need an additional low beam module and high beam module

⇒ Low beam + high beam ~ 200 W / cars

⇒ 4g C02 / autonomy of battery if BEV

⇒ Not enough improvement

Source : DVN Munich, January 2020

VOLVO

High definition headlamp with Microled

What would be a target ?

Estimated Size : H80mm x W80mm x D100mm

Estimated Power : 30 W

Estimated horizontal Field of View : +/-45 degrees

Estimated vertical Field of View : +/-10 degrees

No additional module to do low beam and/or high Beam

xxx K Pixel

Xxx lumen : 1000lm for Low beam on the road, + 1000 additional lm for High beam

EPIC members are welcome on board to find solution

EPIC European Photonics Industry Consortium

Status 2023

Complete High beam field of illumination with 2 HD module

Status 2023

Complete High beam field of illumination with 2 HD module

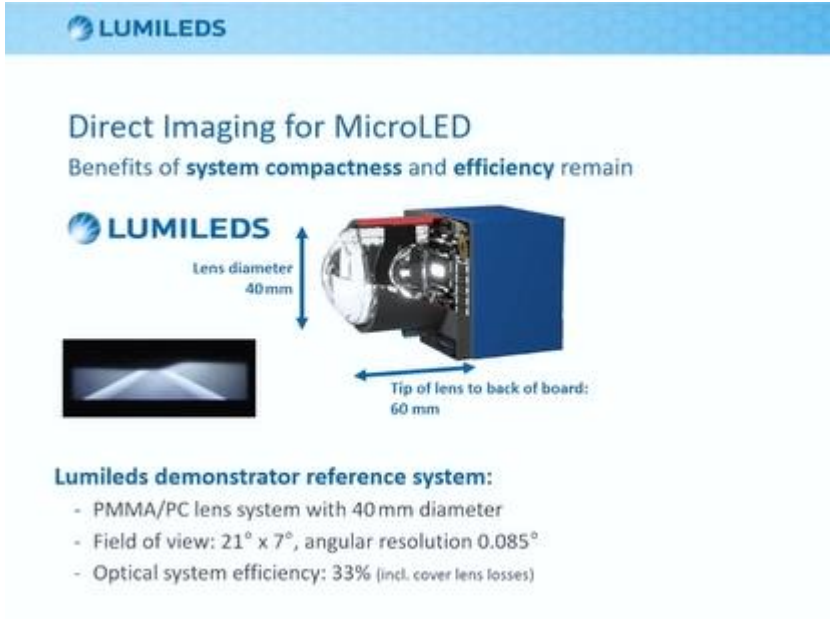

DVN Paris, January 2023

Status 2023

Complete High beam field of illumination with 2 HD module

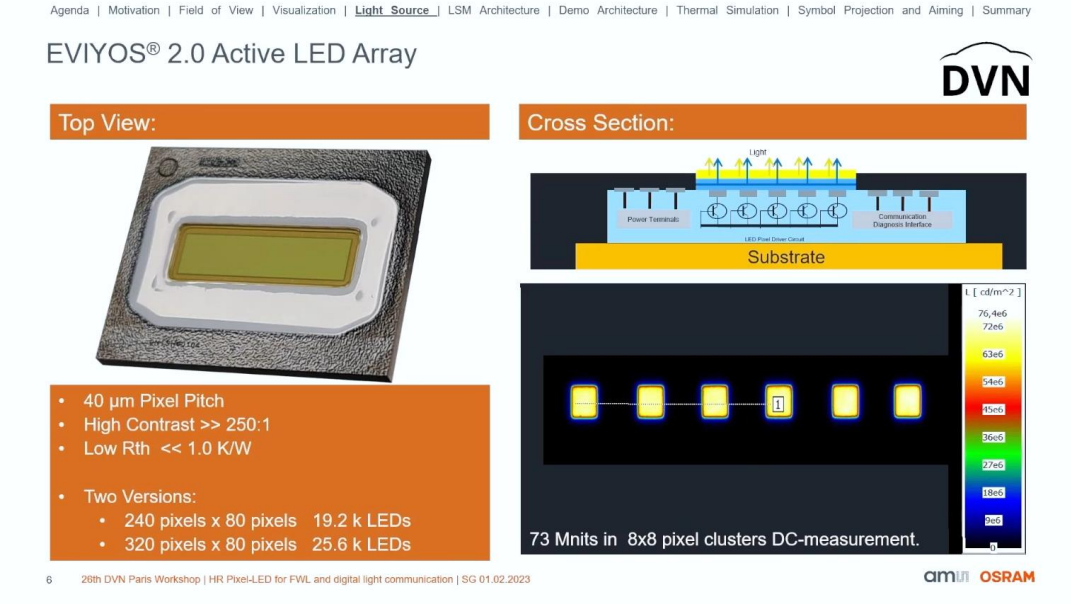

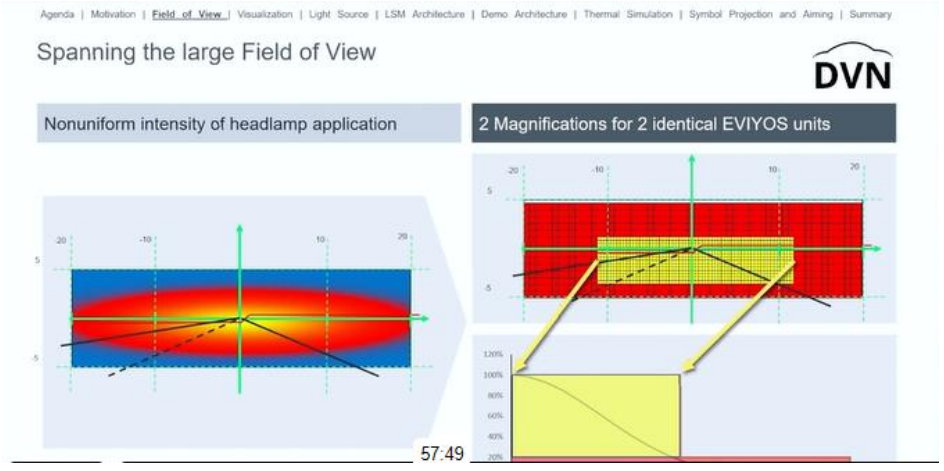

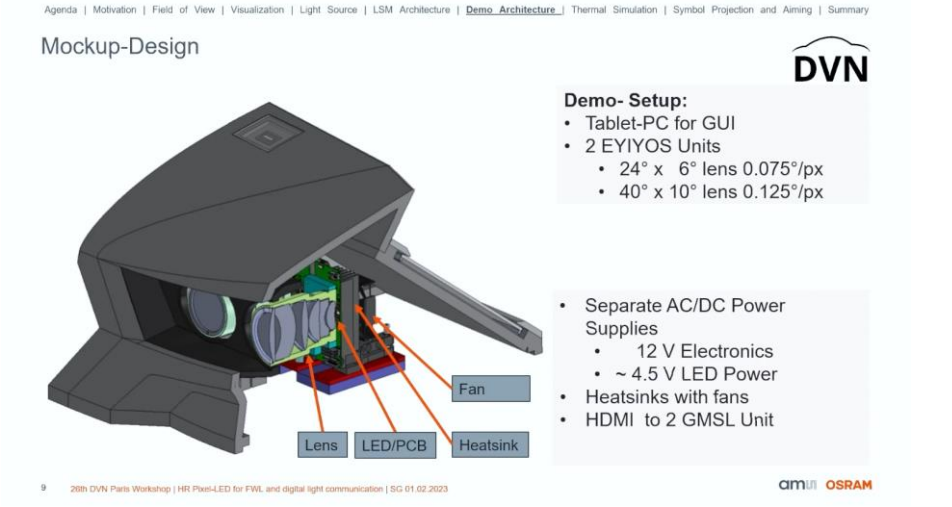

Status 2023

100 kPix in 2026

Complete low beam field of illumation seems to be Not enough

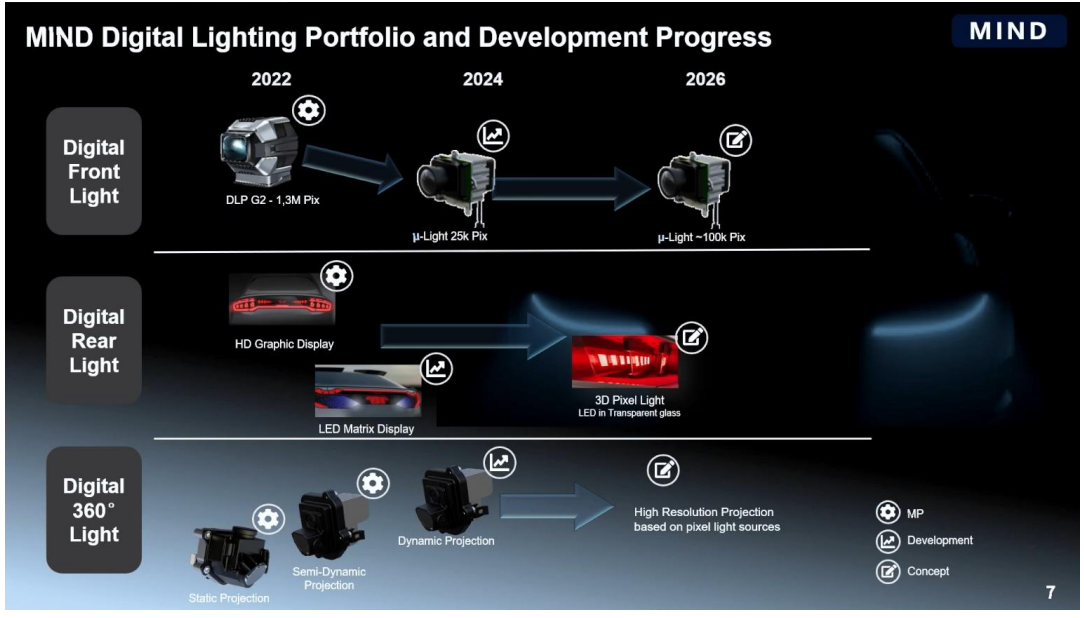

DVN Paris, January 2023